Design Flexibility. Field-Proven!

PURE GOLD

AIR-THRU SAFETY CHUCKS

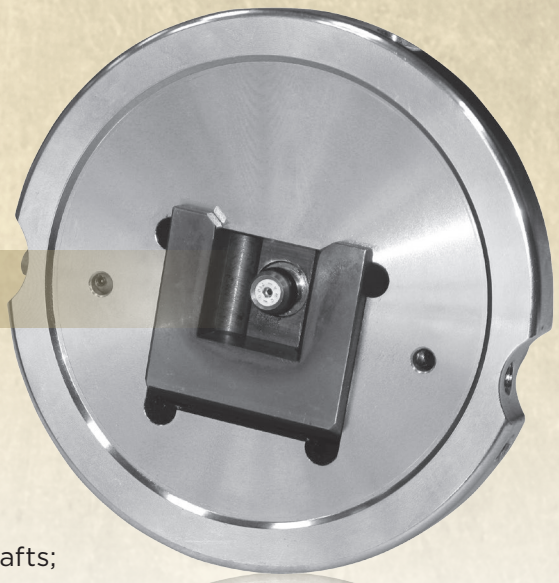

For anyone using Safety Chucks – this is a MUST.

This available option is under-utilized in the industry and would address a number of concerns Safety Managers deal with daily.

- Air is introduced to the shaft once the chucks are closed;
  - No more worries about new operators underinflating air shafts.
- Eliminate finger pinch points. Operators no longer need to use fingers to deflate the shafts;
  - Once the production run is complete and the safety chucks are opened, the shaft auto deflates.
- Eliminate trip hazards; No more air guns and hoses.
- Save money! Shaft maintenance and repairs are reduced significantly because air shafts will always be filled correctly.

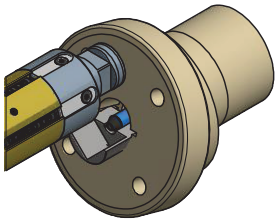

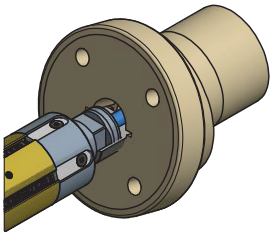

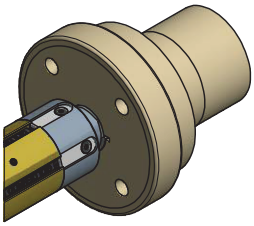

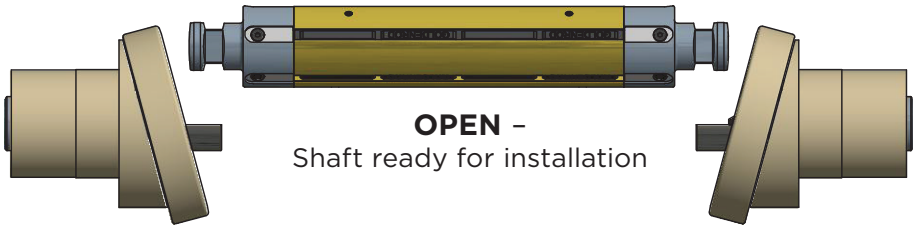

OPEN –
Shaft ready for installation

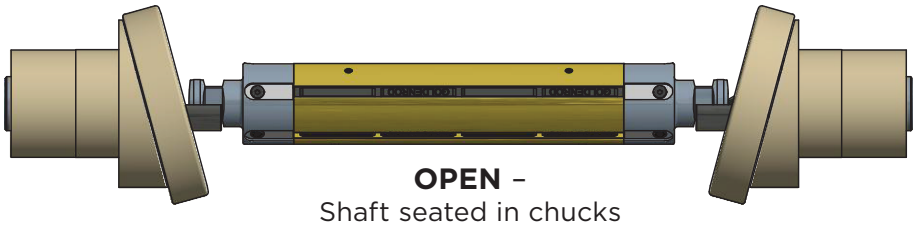

OPEN –
Shaft seated in chucks

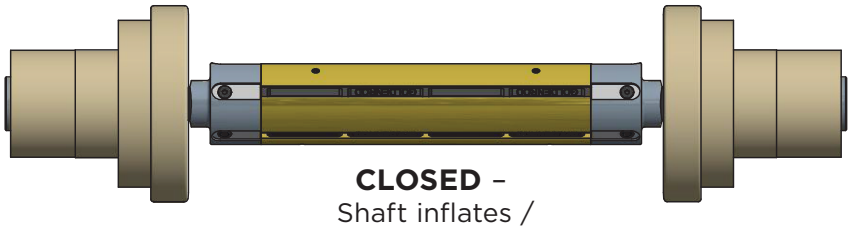

CLOSED –
Shaft inflates /
ready for operation

GOLDENROD CORPORATION
PARTNERED WITH SVECOM P.E.

25 Lancaster Drive, Beacon Falls, CT 06403 USA
Toll Free 1-800-GOLDROD
Tel. (203) 723-4400 • FAX (203) 723-8230
www.goldenrodcorp.com

AIR THRU SAFETY CHUCKS

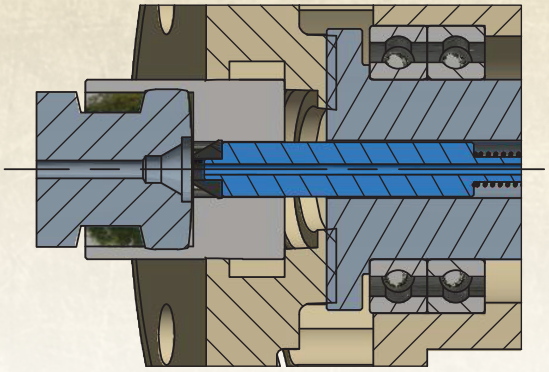

OPEN

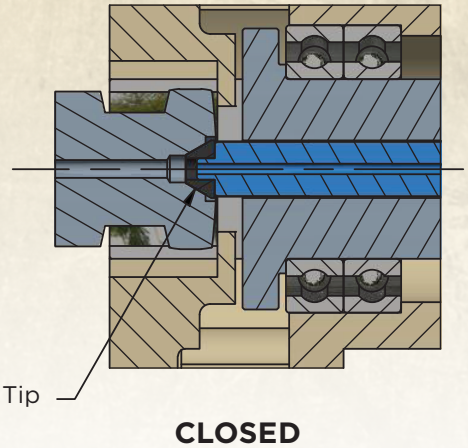

CLOSED

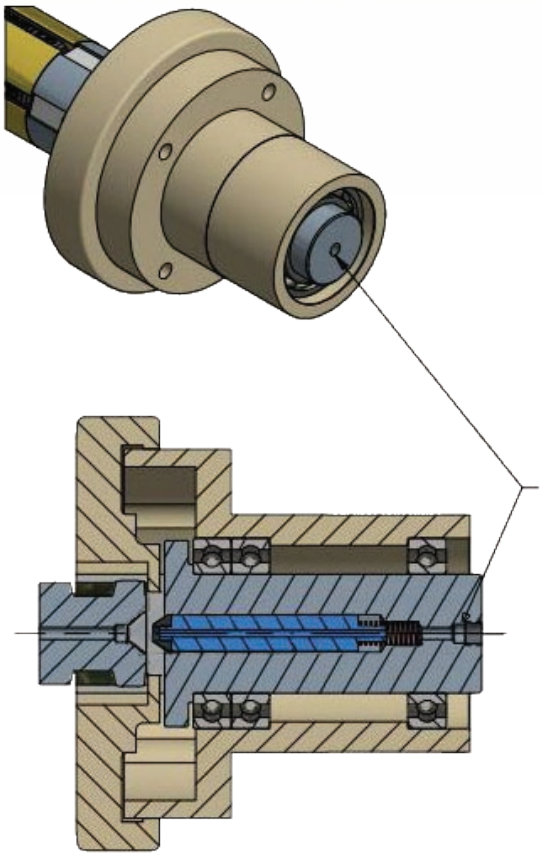

Air-Thru Passage:

When safety chucks are in closed position – retractable air nozzle seals against air shaft journal, and continuous air by way of a rotary union passes through to pressurize air shaft.

When chucks are in opened position – air nozzle retracts and air shaft is depressurized. Can be used with Goldenrod standard locked core shafts or differential shafts.

Air Port Size
as required

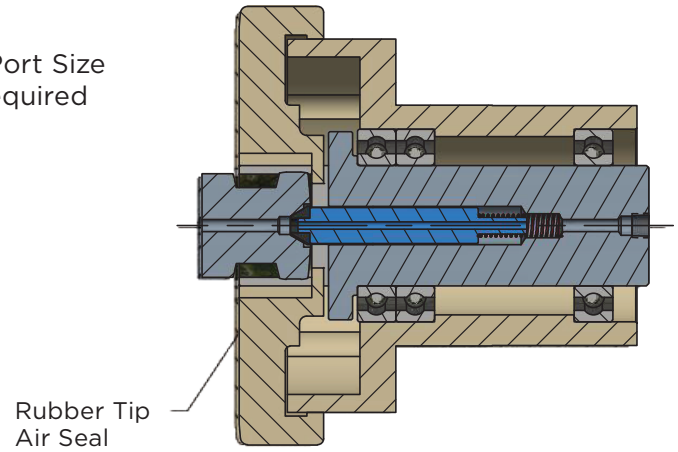

CHUCK OPEN

CHUCK CLOSED

GOLDENROD
CORPORATION
PARTNERED WITH SVECOM P.E.

25 Lancaster Drive, Beacon Falls, CT 06403 USA
Toll Free 1-800-GOLDROD
Tel. (203) 723-4400 • FAX (203) 723-8230
www.goldenrodcorp.com